Xo
freestanding bathtub mixer

clou
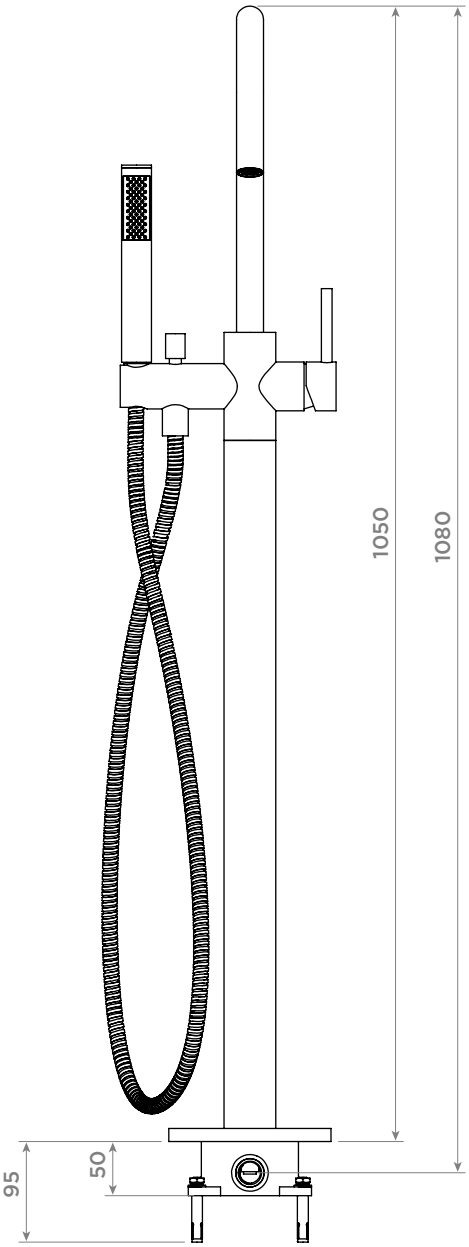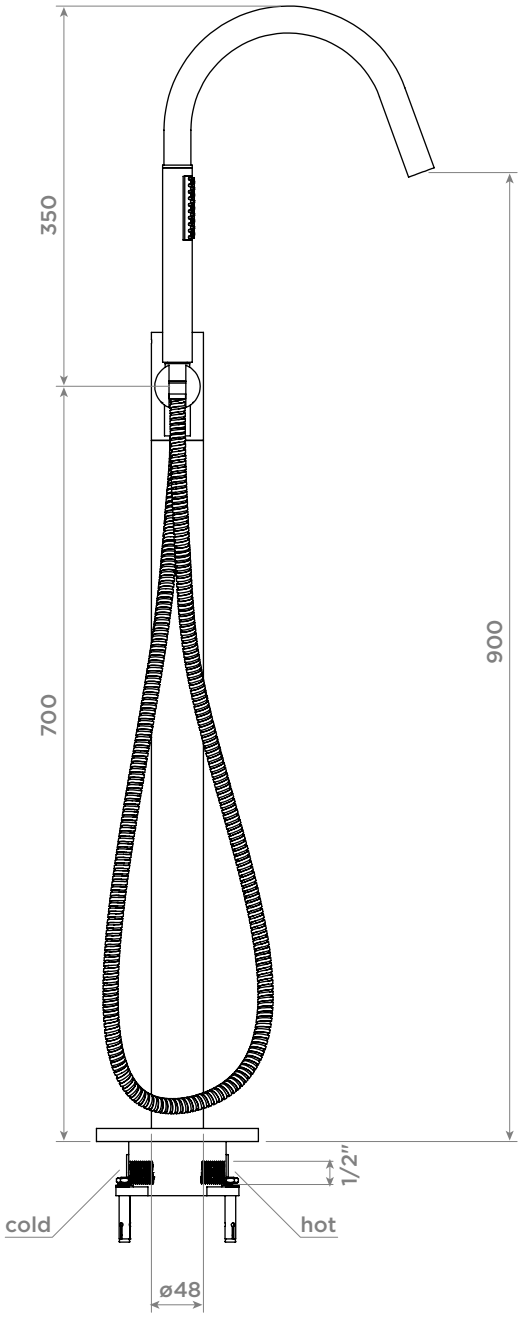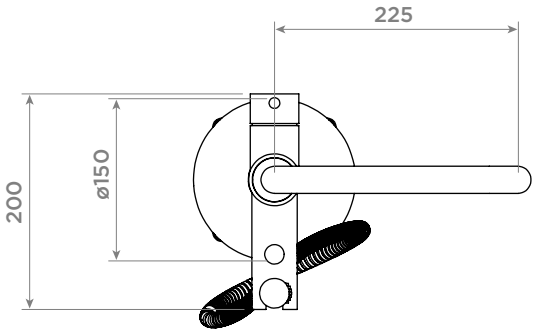
CL/06.04001.21 - CL/06.04001.29