Freddo 11

chrome - brushed stainless steel

clou

CL/06.03015.S - CL/06.03015.41.S

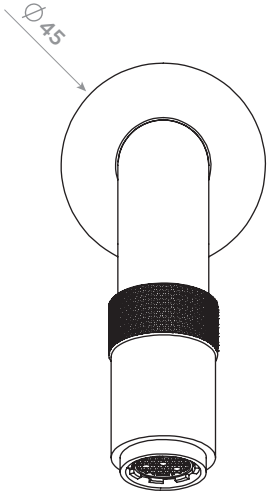

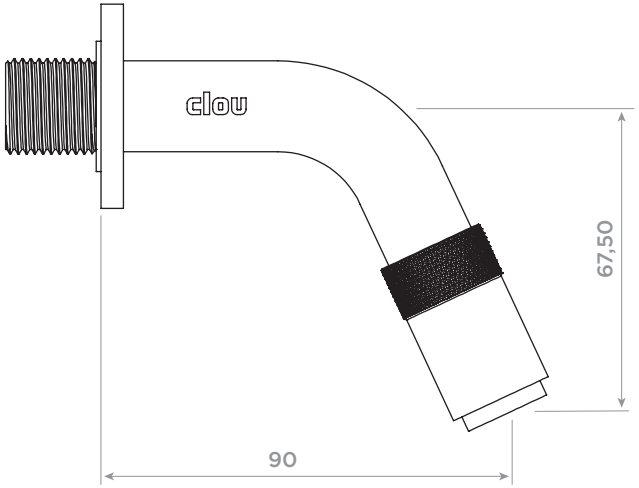

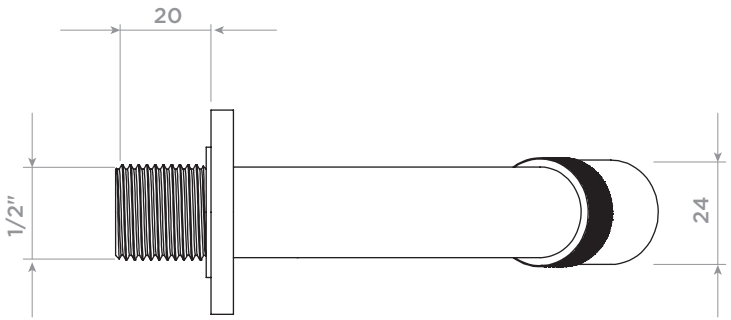

Dimensions in mm, for reference only / 11.04.2017 / rev_03

www.clou.nl