New Flush 3, left
ceramics

clou

CL/03.03432.01

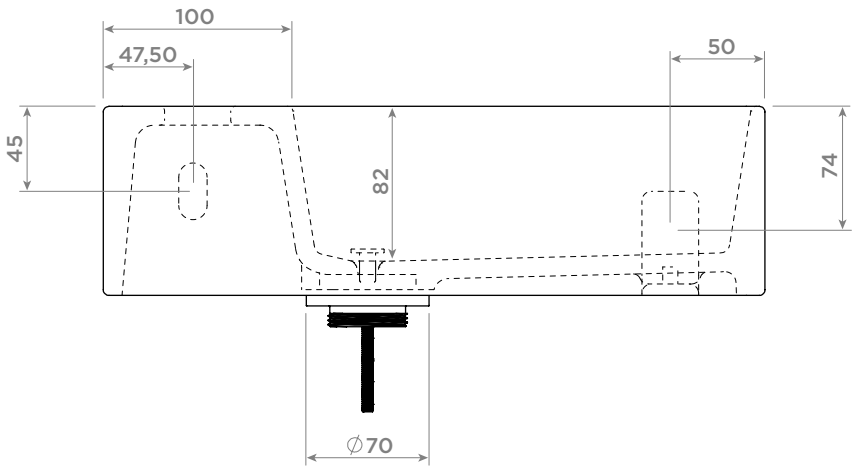

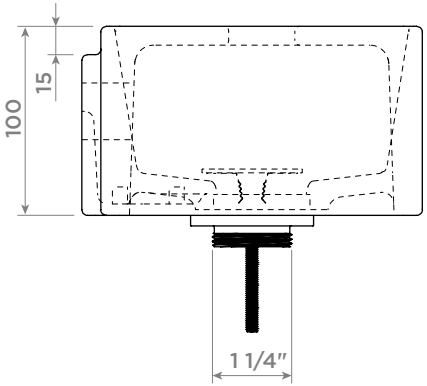

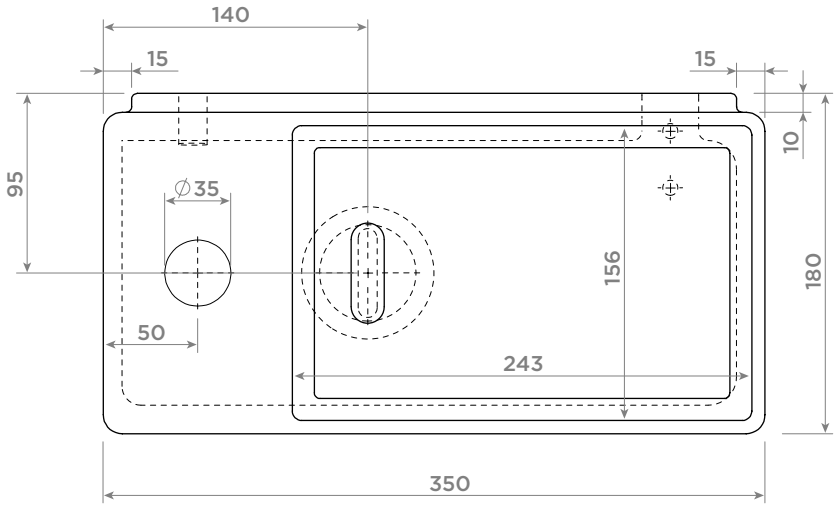

Dimensions in mm, for reference only / 10.02.2020 / rev_01

www.clou.nl